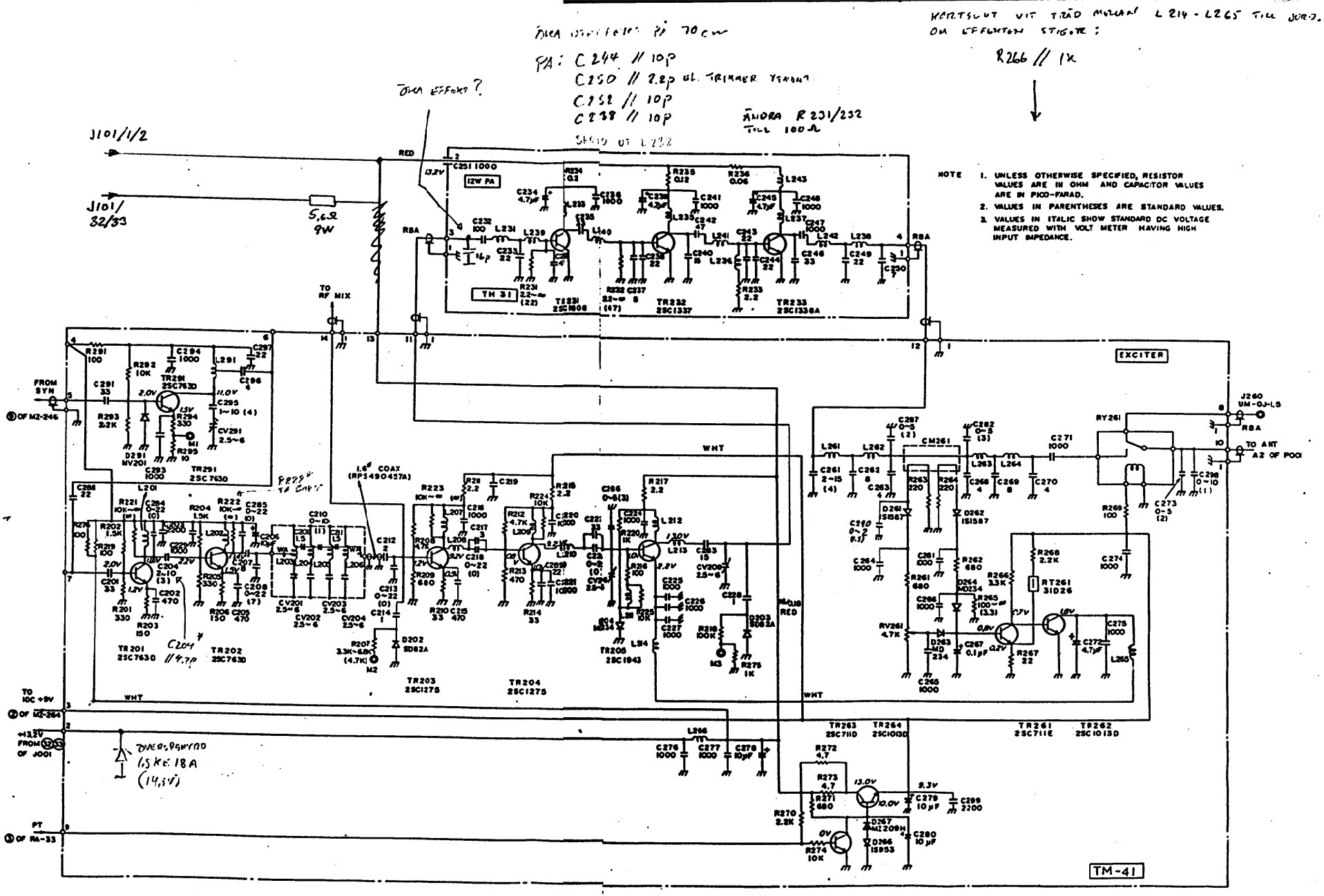

TRANSMITTER SCHEME	RF 312963